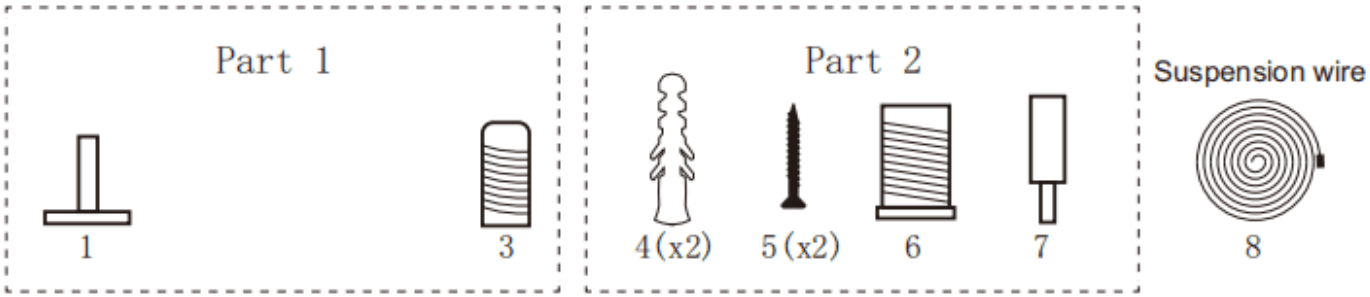

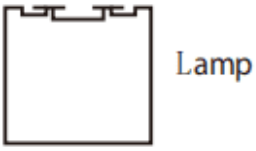
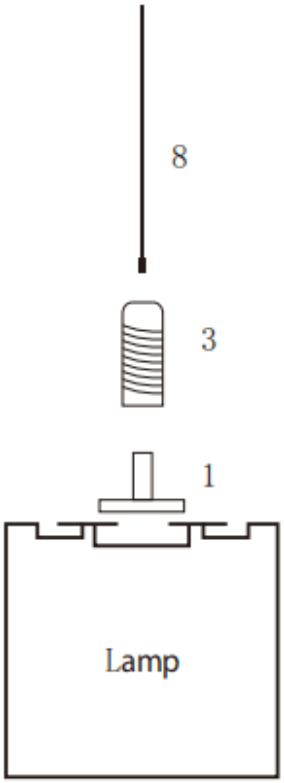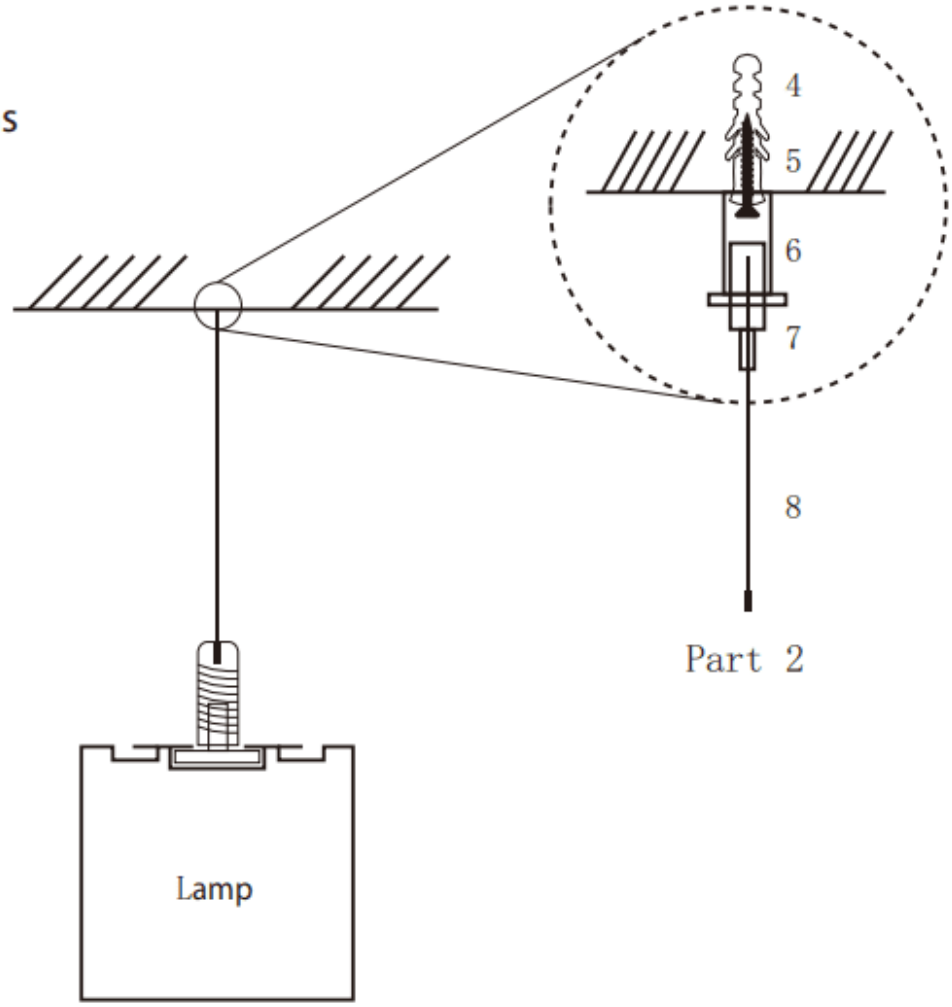
installation instructions